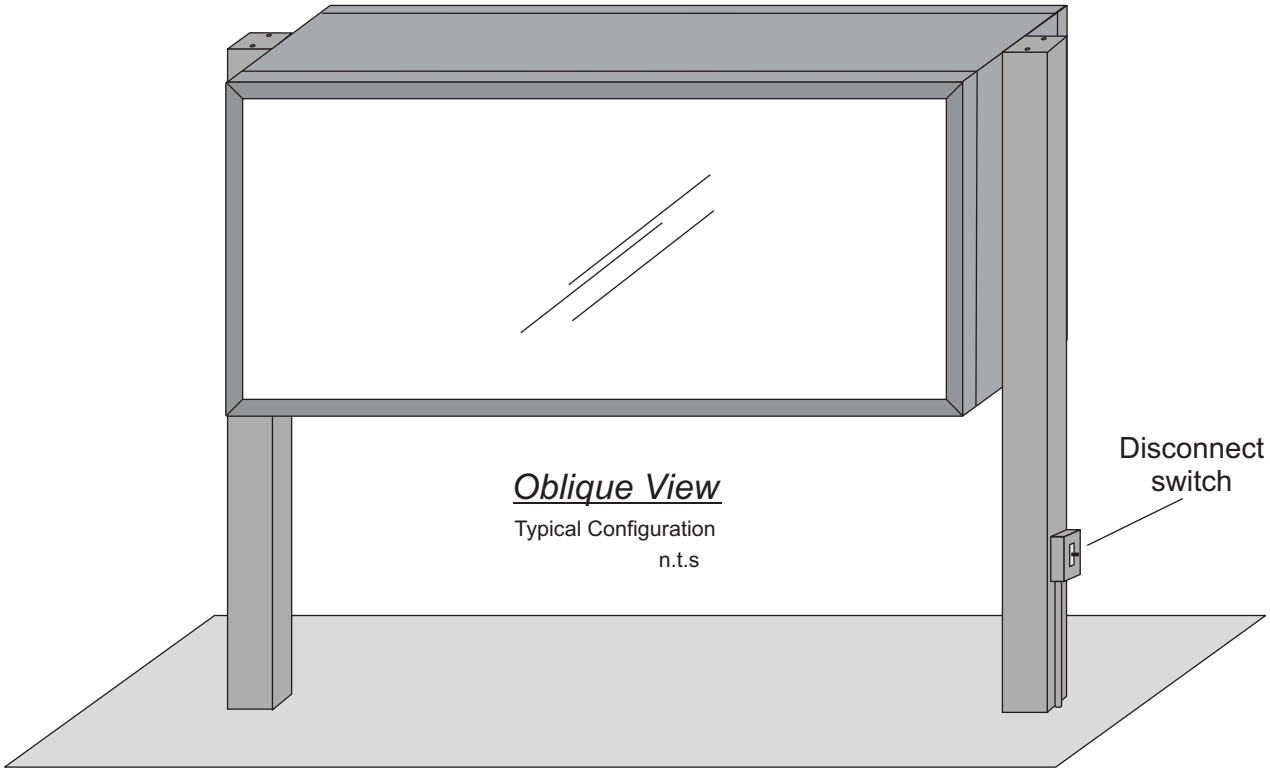

Oblique View

Typical Configuration

n.t.s

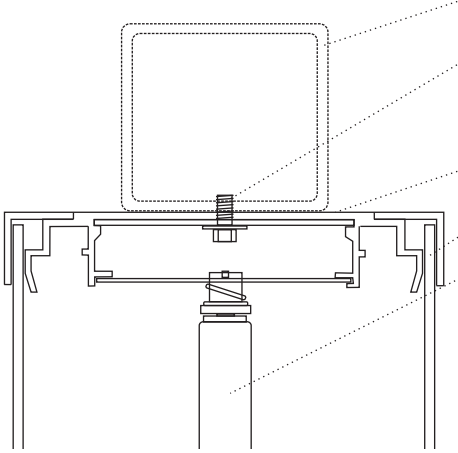

New or existing aluminum or steel support

3/8-18 non-corrosive grade 5 or better steel bolt with flat washer, use (1) bolt at each corner for signs up to 49 sq. ft., use two bolts per corner for signs 50 sq. ft. to 72 sq. ft., bolts must pass through sign body and corner reinforcement angle

Extruded structural aluminum cabinet, 10” or 12” depth

Acrylic or poly-carbonate face, slide-fit, provide hanger bar over 24 sq. ft., use aluminum back for SF applications

High output fluorescent illumination

120 volt primary required, to sign location by others

Sign to be UL listed and labeled

Partial Section

Typical Construction

nts

LISTED
E151394

Reference: Series 250-UL DF illuminated Sign
Standard Specifications, Outboard Mount

Sept. 2014 HRMc